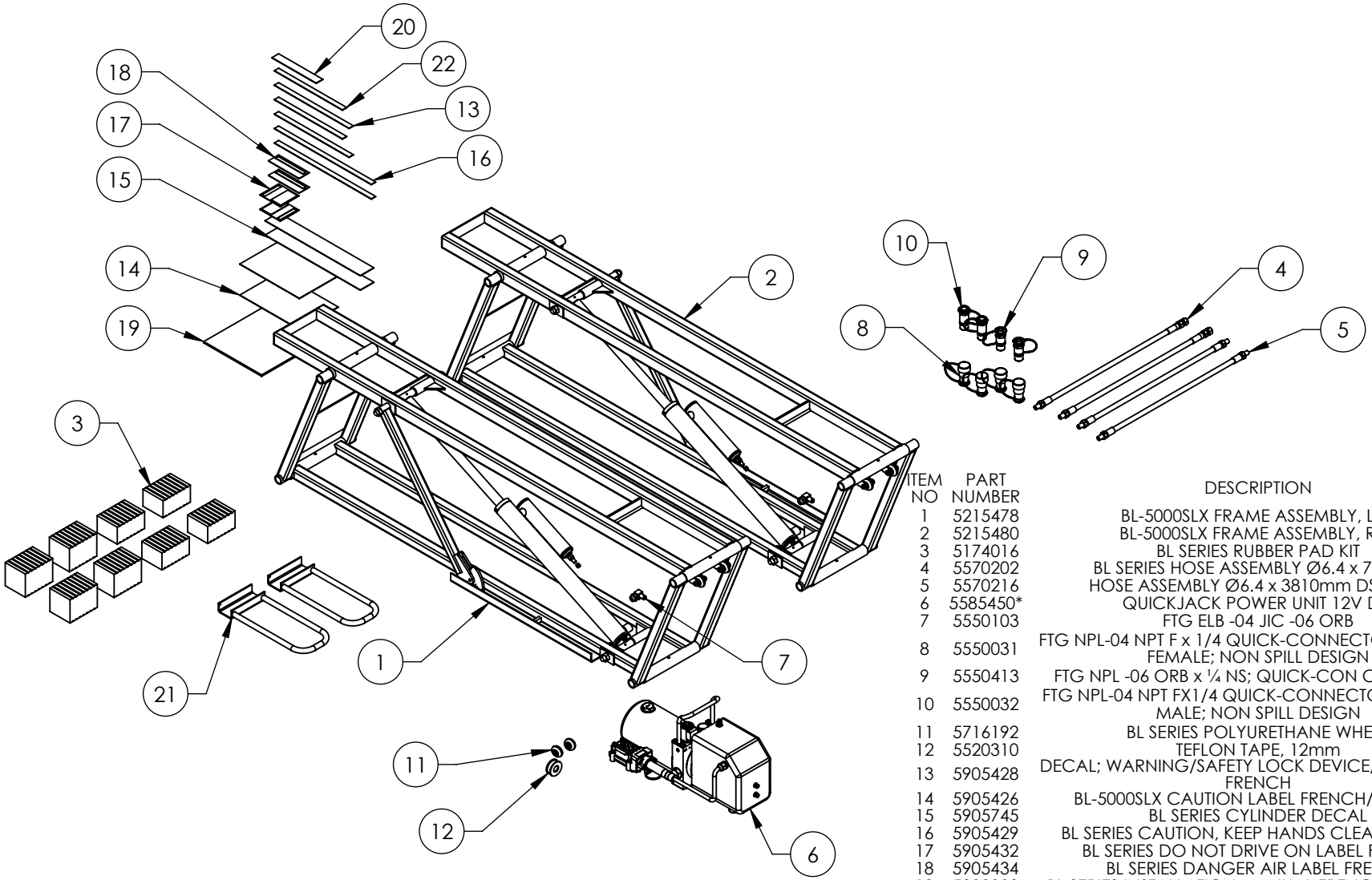

*POWER UNIT
12 V DC

ITEM NO	PART NUMBER	DESCRIPTION	QTY	REV
1	5215478	BL-5000SLX FRAME ASSEMBLY, L.H.	1	K
2	5215480	BL-5000SLX FRAME ASSEMBLY, R.H.	1	K
3	5174016	BL SERIES RUBBER PAD KIT	1	B
4	5570202	BL SERIES HOSE ASSEMBLY Ø6.4 x 705mm	2	D
5	5570216	HOSE ASSEMBLY Ø6.4 x 3810mm DS MALE	2	A
6	5585450*	QUICKJACK POWER UNIT 12V DC	1	-
7	5550103	FTG ELB -04 JIC -06 ORB	2	-
8	5550031	FTG NPL-04 NPT F x 1/4 QUICK-CONNECTOR COUPLER FEMALE; NON SPILL DESIGN	4	-
9	5550413	FTG NPL -06 ORB x ¼ NS; QUICK-CON COUP MALE	2	-
10	5550032	FTG NPL-04 NPT FX1/4 QUICK-CONNECTOR COUPLER MALE; NON SPILL DESIGN	2	-
11	5716192	BL SERIES POLYURETHANE WHEEL	2	D
12	5520310	TEFLON TAPE, 12mm	1	-
13	5905428	DECAL; WARNING/SAFETY LOCK DEVICE/QUICKJACK FRENCH	2	-
14	5905426	BL-5000SLX CAUTION LABEL FRENCH/ENGLISH	2	-
15	5905745	BL SERIES CYLINDER DECAL	2	-
16	5905429	BL SERIES CAUTION, KEEP HANDS CLEAR FRENCH	2	-
17	5905432	BL SERIES DO NOT DRIVE ON LABEL FRENCH	2	-
18	5905434	BL SERIES DANGER AIR LABEL FRENCH	2	-
19	5900008	BL SERIES INSTALLATION MANUAL FRENCH/CANADA	1	-
20	5905436	LABEL; QUICKJACK MAX LIFT CAPACITY/PAIR; 5000.LBS/2268.KG FRENCH	1	-
21	5601108	BL SERIES HANDLE WELDMENT	2	C
22	5905036	ROUTE HOSE UNDER CAUTION LABEL, ENGLISH/FRENCH	2	-

BL-5000SLX